COMBINED ARMATURE VOLTAGE AND FIELD FLUX CONTROL FOR SEPARATELY EXCITED DC MACHINES

Nguyen Thi Mai Huong*, Nguyen Tien Hung
University of Technology - TNU

ABSTRACT

This paper is dealt with the problem of controlling the speed of a separately excited DC machine from standstill to above its rated speed. Instead of using nonlinear combined control of armature voltage and field current, the proposed method in this work is only relied on a linear model of the machine. At the speed below the rated, the field current is held constant and the armature voltage is adjusted up to its maximum value. Conversely, at the speed above the rated, the armature voltage is kept at the rated value while the field current is reduced in order to maintain the machine back electromotive force. The effectiveness of the control method is illustrated via several Simulink results.

Key words: *Separately excited DC machine; field weakening; linear control; armature voltage control; armature rectifier; field rectifier.*

INTRODUCTION

Separately excited DC motor machines (SEDCMs) arestill widely used in many industrial fields since theycan be simply and effectively controlled over wide rangeof the rotor speed below and above the rated speedin relative comparison with other types of electricalmachines [1-6]. It is well known thatSEDCMs can provide a high starting torque andtheir electrical torque, when applying armature voltagecontrol at below rated speed, is directly proportional toarmature voltage. The speed of a SEDCM up to 120% -130% rated can be achieved by varying the field current.Note, however, that the machine developed torque willbe lost at higher rated speed [7].

Normally, in the armature control region, the fieldcurrent is kept constant. The model of a SEDCM can berepresented by linear equations and linear control techniques can be applied to the system [3]. But in the field weakening region, when the variation of the field currenthas to be taken into account, the system turns to benonlinear because of a product of field flux and armaturecurrent as well as a product of field current and rotorspeed. In the literature, several strategies have been proposed to control a SEDCMin the field-weakening region.In [8], an adaptive controller with adaptation updatelaw based on gain-scheduling technique is employed. In[5], a multi-input multi-output (MIMO) controller wasdesigned for a SEDCM using an on-line linearizationalgorithm in which the applied armature and the fieldvoltage are driven simultaneously. An input-output linearizationtechnique based on canceling the nonlinearities in theSEDCM model and finding a direct relationship betweenthe motor output and input quantities is proposed in [6].The suitability of the proposed controller for nonlinearposition and speed tracking applications is indicated viasimulation results. The authors in [9] proposes a newMIMO nonlinear control system based on a modificationof the internal model control. The nonlinear modifiedinternal model control structure is defined by the inverseprocess model and guarantees the offset-free control.In [10], a nonlinear adaptive backstepping based speedcontroller is designed for the field weakening regionof a SEDCM. The theoretical approach is supported bysimulations results showing that

Tel: 0912 479366, Email: maihuongsdh@tnut.edu.vn

the proposed controller guarantees a good performance and robustness to the parameteruncertainties. The authors in [4] investigate the designof a feedback linearization controller and two nonlinear controllers for a SEDCM operating in the field weakening region. The implementation is also verifiedthrough experimental results.

In this paper we investigate a simple method whichincorporates both armature voltage and field currentcontrol in order to provide smooth and precise speedregulation from standstill to speeds above the rated.Instead of employing nonlinear controller design, we use the linear technique to control a SEDCMin the field-weakening region. The idea behindthis method is similar to the work in [11] in whichthe linear armature voltage control will be combinedwith the field current control in order to achieve higherrated speed. The effectiveness of the proposed strategyis demonstrated through simulation results.

DC MACHINE MODEL

The electrical behavior of the SEDCM can be expressedby the following equation:

$$\begin{cases} v_a = e_a + R_a i_a + L_a \dfrac{di_a}{dt} \\ v_f = R_f i_f + L_f \dfrac{di_f}{dt} \end{cases} \quad (1)$$

where $e_a = K_m i_f \omega$ is the back-electromotive force (EMF)of the motor, $T_e = K_m i_f i_a$ is the electrical torque, T_L is the load torque, v_a is the terminal voltage, R_a is thearmature resistance, v_a is the armature inductance, i_a is the armature current, v_f is the field voltage, R_f is the field resistance, L_f is the field-armature mutualinductance, and i_f is the field current, respectively.

The mechanical behavior of the SEDCM is describedby the following equation:

$$J\frac{d\omega}{dt} = T_e - T_L - B_m\omega - T_f \quad (2)$$

where T_L is the load torque, ω is the angular speed, J isthe inertial torque of the motor, B_m is the viscous frictioncoefficient, and T_f is the Coulomb friction torque, respectively.

Since $\omega = 2\pi n$,where n is in revolution per second (rpm), we canwrite

$$\frac{dn}{dt} = \frac{1}{2\pi J}(T_e - T_L - B_m\omega - T_f). \quad (3)$$

The SEDCM equations (1) and (3) can be rewrittenas follows

$$\begin{cases} \dfrac{di_a}{dt} = -\dfrac{R_a}{L_a} i_a - \dfrac{2\pi K_m i_f}{L_a} n + \dfrac{1}{L_a} v_a, \\ \dfrac{di_f}{dt} = -\dfrac{R_f}{L_f} i_f + \dfrac{1}{L_f} v_f, \\ \dfrac{dn}{dt} = \dfrac{K_m i_f}{2\pi J} i_a - \dfrac{B_m}{J} n - \dfrac{1}{2\pi J}(T_L + T_f). \end{cases} \quad (4)$$

Let $c_1 = -R_a / L_a$, $c_2 = -2\pi K_m / L_a$, $c_3 = -R_f / L_f$, $c_4 = K_m / (2\pi J)$, $c_5 = -B_m / \mathrm{J}$, $x_1 = i_a$, $x_2 = i_f$, and $x_3 = n$.

The state-spaceequations (4) now read as

$$\begin{cases} \dot{x}_1 = c_1 x_1 + c_2 x_2 x_3 + \dfrac{1}{L_a} v_a, \\ \dot{x}_2 = c_3 x_2 + \dfrac{1}{L_f} v_f, \\ \dot{x}_3 = c_4 x_1 x_2 + c_5 x_3 - \dfrac{1}{2\pi J}(T_L + T_f). \end{cases} \quad (5)$$

For sake of simplicity we can assume that the viscousfriction coefficient and the Coulomb friction torque areboth zero. In this scenario, if the field current i_f is keptconstant, the SEDCM model (5) can be expressed in amatrix form as

$$\frac{d}{dt}\begin{bmatrix} i_a \\ n \end{bmatrix} = \begin{bmatrix} -\dfrac{R_a}{L_a} & -\dfrac{2\pi K}{L_a} \\ \dfrac{K}{2\pi J} & 0 \end{bmatrix}\begin{bmatrix} i_a \\ n \end{bmatrix} + \begin{bmatrix} \dfrac{1}{L_a} & 0 \\ 0 & -\dfrac{1}{2\pi J} \end{bmatrix}\begin{bmatrix} v_a \\ T_L \end{bmatrix} \quad (6)$$

where $K = K_m \Phi$, Φ is the machine excited field flux.

In (6), the motor current i_a and rotational speed n are chosen as the state variables $x = [i_a \quad n]^T$ whilethe terminal voltage and load torque are considered asinputs $u = [v_a \quad T_L]^T$.

Equation (6) can also be rewritten in a compact formas

$$\begin{cases} \dot{x} = A_m x + B_m u, \\ y = C_m x + D_m u. \end{cases} \quad (7)$$

where

$$A_m = \begin{bmatrix} -\frac{R_a}{L_a} & -\frac{2\pi K}{L_a} \\ \frac{K}{2\pi J} & 0 \end{bmatrix}, \quad B_m = \begin{bmatrix} \frac{1}{L_a} & 0 \\ 0 & -\frac{1}{2\pi J} \end{bmatrix},$$

$$C_m = \begin{bmatrix} 1 & 0 \\ 0 & 1 \end{bmatrix}, \quad D_m = \begin{bmatrix} 0 & 0 \\ 0 & 0 \end{bmatrix}.$$

COMBINED ARMATURE VOLTAGE AND FIELD FLUX CONTROL

The combination of armature voltage and field fluxcontrol for a SEDCM is required when a wide range ofoperating speed is expected. If the armature voltage hasnot reached its maximum value, the armature voltagecontrol will be priorly employed since it guarantees themaximum torque capability of the motor at all speeds[2]. The field flux control is only used for getting speedshigher than the rated at which the armature voltagecannot be increased beyond the rated value. The theorycharacteristics of electrical torque T and power P_m forspeeds below and above base speed are shown in figure1.

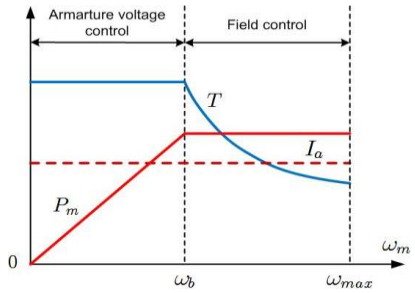

Fig. 1.*Characteristic of the combined armature voltage and field current control*

In the SEDCM control configuration, the motor armature winding is supplied by a voltage source v_a and themotor field winding is supplied by a voltage source v_f.At the speed is below the rated, the fieldvoltage v_f is kept at its maximum value which producesa constant field current i_f and, therefore, a constant magnetic flux in the machine air-gap. The speed of the SEDCMis regulated by varying the armature voltage v_a up to itsrated value. Note, in this method, if the armature currentis kept constant the torque generated on the machine shaftwill remain constant. Now, we assume that the armaturevoltage v_a has reached its rated value. In this situation, ifthe field voltage v_f is decreased leading to the reductionof the field current i_f, the magnetic flux in the air-gapand, therefore, the back emf e_a are also decreased. Thisresults in the increase of the armature current and therotor speed. When the rotor speed continues to increase, the back emf e_a also increases. As a result, the rotorspeed is set at a new equilibrium point above the ratedspeed. This process is in the field control region wherethe electrical torque decreases while the machine powerremains constant.

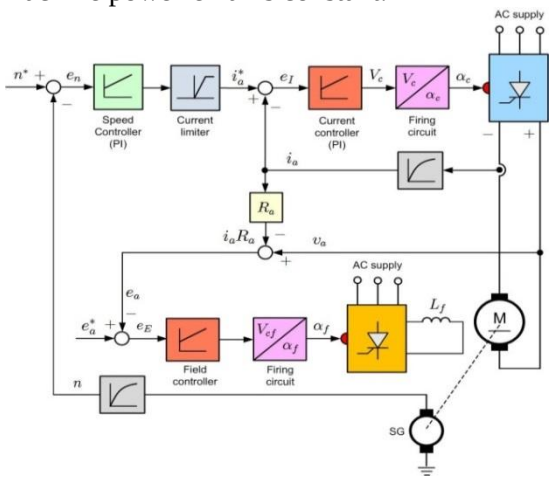

Fig. 2.*Field control*

The control scheme of the overall system is shown infigure 2 [2]. The armature voltage

control consists of twoloops. The inner loop is the current control loop with a PIcontroller. The outer loop is the speed control with a PIcontroller also. As mentioned above, the armature voltagecontrol is aimed at regulating the speed from zero tothe rated value with the maximum value of the field current. The fieldflux control is formed by a back emf control loop with a PI controller. The field flux controlis used for speed control above the rated in thefield weakening region and at the rated armature voltage.The armature and the field currents are controlled bytwo controlled rectifiers.

The following discussion is based on the idea of [2].In the field control loop, the reference value e_a^* of the back emf is set in between 0.85 to 0.95 of the rated armature voltage. The actual value of the back emf $e_a = v_a - i_a R_a$ iscompared with the reference voltage e_a^*. If the speed of the SEDCM is still below the base speed, the armature voltage v_a has not reached its maximum value. This means that, for the operation below base speed, v_a is small and the error e_f of the back emf and its reference value will exhibit a large value. The field controller produces a large output value leading to the saturation of the controlled signal. This boils down to the situation where the ratedvoltage is applied across the field or, in other words, the field current is set at a maximum value for speed below the base speed. Note that the saturation of the field controller will no longer exist if the speed of the SEDCM is closed to the base speed. From now on, if the reference speed n^* is continuously increased the speed error e_n becomes positive and a higher value of the current reference i_a^* is expected. This leads to an increase of the armature voltage v_a by reducing the firing angle of the armature rectifier. Because of that, the machine speed is accelerated causing an increase of the back emf e_a and a reduction of the field control loop error e_f, which in turn, resulting in a reduction of the field current. The development of the machine speed a long with the decreasing of the field currentcontinuesuntil the machine speed is reached its reference value. At that moment, the speed error e_n becomes small and the armature voltage v_a will return to its previous value.Therefore, by applying the field weakening,we obtain the speed above the base speed when the armature terminal voltage has reached the rated value.

Note that the respond of the controlled system is very slow in the field weakening region because of the large field time constant [2].

SIMULATION RESULTS

The Simulink model of the controlled system is shown in figure 3. The armature current controller that is designed based on the linear model of a SEDCM as in (6) provides two firing angle 1 and 2 for a dual thyristor-based controlled rectifier in a simultaneous control mode. However, in this work, we only consider the speed control of a SEDCM in one direction. Therefore, there is only one rectifier working all the time. The speed controller provides a reference value for the current control loop. The field controller is designed to keep the back emf at 0.9 of the rated armature voltage.

The power system shown in figure 4 consists of threethyristor-based controlled rectifiers and a SEDCM withparameters presented in Appendix A.

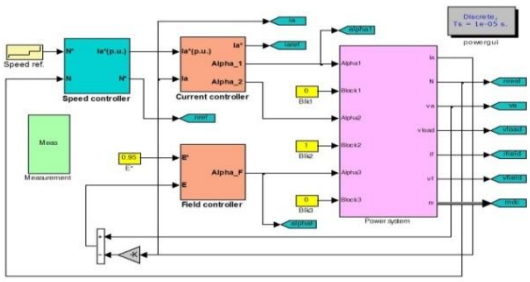

Fig. 3.*Simulink model of the overall controlled system*

Figure 5 shows the behavior of the controlled systemwith maximum values of armature voltage and field current. The firing angles of the armature and field voltageconverters are set at zero. As a result, the armature andfield voltages achieve their rated values and producethe maximum values of armature and field currents. Therated speed of the SEDCM is about 870rpm.

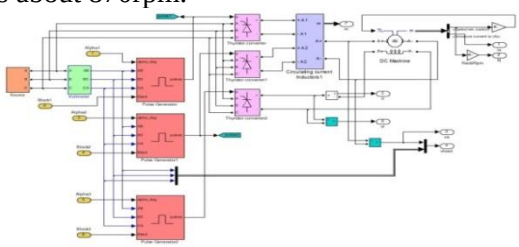

Fig. 4.*Simulink model of the power system*

In the next simulation we perform a speed controlfrom zero to above rated speed of the rotor. At $t = 0.2s$ the reference speed is set at 300rpm. Then the speedis increased to 700rpm at $t = 4s$. Finally, at $t = 6s$, the reference speed is set at 1200rpm. As can be seenfrom figure 6, at the speed above the rated, the armaturevoltage is reached its maximum value while the fieldvoltage and current are reduced in the filed weakeningregion. The real speed tracks its reference perfectlyeven at above the rated.

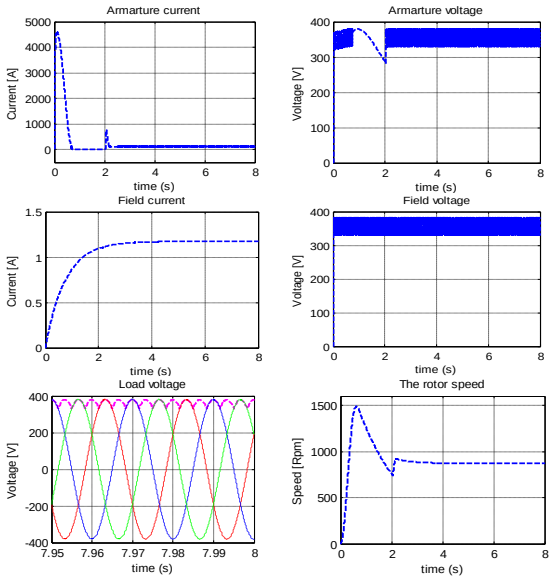

Fig. 5.*Behavior of the controlled system with maximum values of armature voltage and field current*

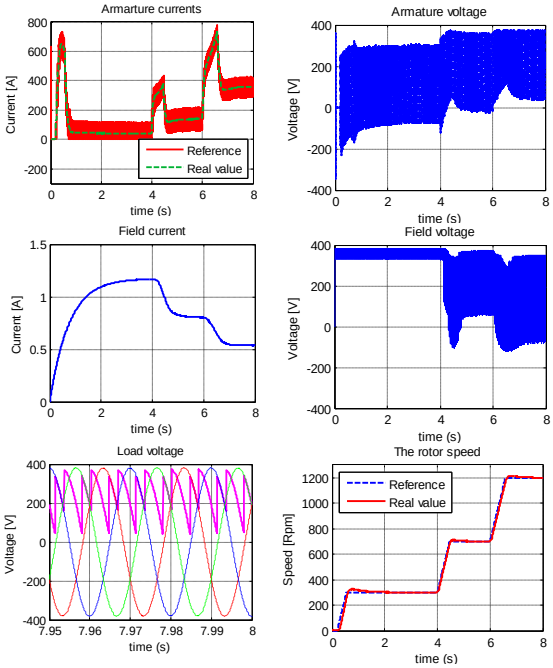

Fig. 6.*Behavior of the controlled system with the combination of the armature voltage and field flux control*

CONCLUSION

This paper shows a simple control method for the combination the armature voltage and field flux control atthe field weakening region of a separately excited DCmachine. A linear design was implemented for both currentand speed control loops. The speed regulation above therated was achieved by keeping the back emf at a constantvalue when a higher speed was required. The simulationresults show that the proposed method is simple buteffective.

APPENDIX A
DC MACHINE PARAMETERS

Armature resistance R_a	$0.076\,\Omega$
Armature inductance L_a	0.00157H
Field resistance R_f	$310\,\Omega$
Field inductance L_f	232.5H
Field-armature mutual inductance L_{af}	3.32H
Total inertia J	$10\ kg.m^2$
Viscous friction coefficient B_m	0.32N.m.s

REFERENCES

1. W. Leonhard (1996). *Control of electrical drives*. Springer.
2. Gopal Dubey (1989). *Power Semiconductor Controlled Drives*. Prentice Hall.
3. Z.Z. Liu, F.L. Luo, andM.H. Rashid (2003). "Speed nonlinear control of DC motor drive with field weakening".*IEEE Transactions on Industry Applications, 39*.
4. M. Zribi and A. Al-Zamel (2007). "Field-weakening nonlinear control of a separately excited DC motor". *Mathematical Problems in Engineering*.
5. R. Harmsen and J. Jiang (1994). "Control of a separately excited DC motor using on-line linearization". *American Control Conference*.
6. M. H. Nehrir and F. Fateh (1996). "Tracking control of dc motors via input-output linearization". *Electric Machines and Power Systems*, No. 24, pp. 237-247.
7. W.I. Hameed, A.S. Kadhim, and A.A.K. Al-Thuwaynee (2016). "Field weakening control of a separately excited dc motor using neural network optemized by social spider algorithm". *Scientific Research Publishing*.
8. M. R.Matausek, B. I. Jeftenic, D.M.Miljkovic, and M. Z. Bebic (1996). "Gain scheduling control of dc motor drive with field weakening". *IEEE Transactions on Industrial Electronics*, No. 43, Issue 1, pp. 153-162.
9. M. R. Matausek, D. M. Miljkovic, and B. I. Jeftenic (1998). "Nonlinear multi-input-multi-output neural network control of DC motor drive with field weakening". *IEEE Transactions on Industrial Electronics*, No. 45, Issue 1, pp. 185-187.
10. J. Zhou, Y. Wang, and R. Zhou (2000). "Adaptive backstepping control of separately excited DC motor with uncertainties". *International Conference on Power System Technology*, No. 1, pp. 91-96.
11 J.G. Kettleborough, I.R. Smith, V.V. Vadher, and F.L.M. Antunes (1991). "Microprocessor-based DC motor drive with spillover field weakening". *IEEE Transactions on Industrial Electronics*, No. 38, pp. 1425-1430.

TÓM TẮT

KẾT HỢP ĐIỀU KHIỂN ĐIỆN ÁP PHẦN ỨNG VÀ TỪ THÔNG KÍCH TỪ CỦA CÁC MÁY ĐIỆN MỘT CHIỀU KÍCH TỪ ĐỘC LẬP

Nguyễn Thị Mai Hương*, Nguyễn Tiến Hưng
Trường Đại học Kỹ thuật công nghiệp – ĐH Thái nguyên

Bài báo này giải quyết bài toán điều khiển tốc độ động cơ một chiều kích từ độc lập từ tốc độ bằng 0 đến tốc độ lớn hơn tốc độ cơ bản. Thay vì sử dụng phương pháp điều khiển phi tuyến khi kết hợp điều khiển điện áp phần ứng và từ thông kích từ, các tác giả đề xuất sử dụng mô hình tuyến tính của động cơ. Ở tốc độ dưới tốc độ cơ bản, dòng điện kích từ được giữ ở giá trị hằng số và điện áp phần ứng được điều chỉnh cho đến giá trị cực đại cho phép. Ngược lại, ở tốc độ lớn hơn tốc độ cơ bản, điện áp phần ứng được giữ ở giá trị cực đại và dòng điện kích từ được giảm xuống để duy trì sức điện động ở giá trị mong muốn. Hiệu quả của phương pháp đề xuất được minh họa thông qua một số kết quả mô phỏng.

Từ khóa: *Động cơ điện một chiều kích từ độc lập; suy giảm từ thông; điều khiển tuyến tính; điều khiển điện áp phần ứng; bộ chỉnh lưu phần ứng; bộ chỉnh lưu kích từ.*

Ngày nhận bài: 01/9/2017; Ngày phản biện: 13/10/2017; Ngày duyệt đăng: 16/10/2017

Tel: 0912 479366, Email: maihuongsdh@tnut.edu.vn