ANALYSIS OF BENDING OF CORRUGATED METAL SHEET

Nguyen Dinh Ngoc*, Nguyen Thi Hue
College of Technology - TNU

SUMMARY

The article presents some results of the bending of sinusoidal corrugated metal plate under the boundary conditions 4 hinge edge by analytic methods. Sinusoidal corrugated metal plates are converted to orthotropic flat plates based on equivalent membrane stiffness and bending stiffness. Numerical results of deflections calculated on flat plates are compared and evaluated with the ANSYS results.

Keywords: *Corrugated plate, deflection, equivalent orthotropic plate, ANSYS, FEM*

INTRODUCTION

Corrugated plates are found in all branches of engineering practise. The corrugations reinforce the plates and improve their strength to weight ratio. Because of these superiorities, corrugated plates are popular in decking, roofing and sandwich plate core structures.

Corrugated plates of wave form made of isotropic materials were considered as flat orthotropic plates with corresponding orthotropic constants determined by the Syedel's technique [3]. This approach was presented in [1-2]. In these papers, the authors converted corrugated plate into equivalent flat plates by means of only bending stiffness but without membrane stiffness.

The purpose of the present paper is to calculate deflections of corrugated plates on its model equivalent orthotropic plate including both equivalent membrane stiffness and bending stiffness. These equivalent stiffness bases on Briassouli's technique [4].

SINUSOIDAL CORRUGATED PLATE AND ITS EQUIVALENT FLAT PLATE

Consider a rectangular symmetrical corrugated plate in the form of a sine wave (Fig.1). The plate is subjected to uniform contribution load in the z direction. Suppose the portion of cross-section line of the corrugated plate in the plane (x, z) has the form of a sine wave.

$$z = H \sin \frac{\pi x}{l}$$

Where: H – wave amplitude; l- half wave

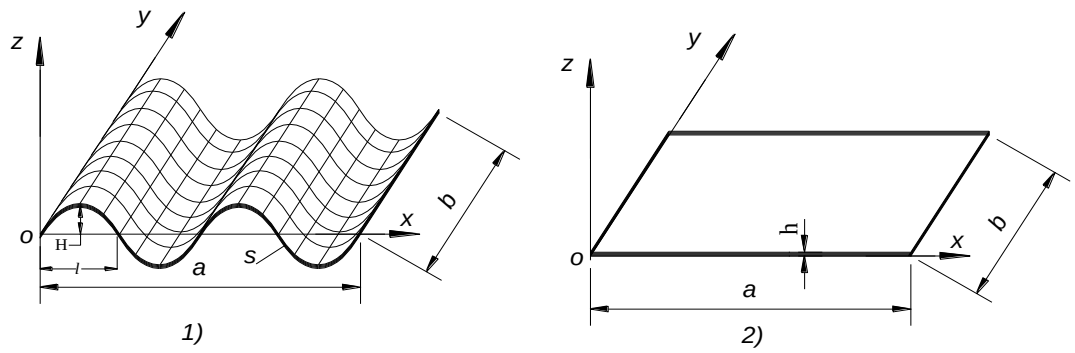

Fig.1. *Sinusoidal corrugated plate and its equivalent plate*

* *Tel: 0984 076555, Email: ngocnd@tnut.edu.vn*

Linear strain-displacement relationships for a such corrugated plate based on [5] are:

$$\varepsilon_x = \frac{\partial u}{\partial x} - kw \qquad k_x = -\frac{\partial^2 w}{\partial x^2}$$

$$\varepsilon_y = \frac{\partial v}{\partial y} \qquad k_y = -\frac{\partial^2 w}{\partial y^2} \qquad (1)$$

$$\gamma_{xy} = \frac{\partial u}{\partial y} + \frac{\partial v}{\partial x} \qquad k_{xy} = -2\frac{\partial^2 w}{\partial x \partial y}$$

Where *u*, *v*, and *w* denote displacement of a point along x, y and z directions respectively, ε_x, ε_y, γ_{xy} are strains; k is the curvature of the portion line in (x, z) plane, which is defined as:

$$k = \frac{z''}{\left(1 - z'^2\right)^{\frac{3}{2}}} \approx z'' = \frac{-H\pi^2}{l^2}\sin\frac{\pi x}{l}$$

From the stress – strain relationships, after integrating through the thickness of the plate we obtain the expressions for stress resultants:

$$N_x = A^*_{11}.\varepsilon_x + A^*_{12}.\varepsilon_y \qquad M_x = D^*_{11}.k_x + D^*_{12}.k_y$$

$$N_y = A^*_{12}.\varepsilon_x + A^*_{22}.\varepsilon_y \qquad M_y = D^*_{12}.k_x + D^*_{22}.k_y \qquad (2)$$

$$N_{xy} = A^*_{66}.\gamma_{xy} \qquad M_{xy} = D^*_{66}.k_{xy}$$

Where: A_{ij}^*, A_{ij} coefficients of membrane stiffness of a corrugated plate.

D_{ij}^*, D_{ij} coefficients of bending stiffness of a corrugated plate

Based on Briassouli's technique [4], corrugated plates are converted to flat plates by using stiffness which is described by flowing coefficients:

$$A^*_{11} = \frac{A_{11}\left(1 - \mu_{12}^2\frac{E_2}{E_1}\right)}{\left[1 + \frac{6H^2}{h^2}\left(1 - \mu_{12}^2\frac{E_2}{E_1}\right)\left(\frac{s^2}{l^2} - \frac{s}{2\pi l}\sin\frac{2\pi s}{l}\right)\right]}; \quad D^*_{11} = \frac{E_1.h^3}{12.\left(1 - \mu_{12}\mu_{21}\right)}.\frac{l}{s} = D_{11}\frac{l}{s}$$

$$A^*_{22} = A_{22}\left(1 - \mu_{12}^2\frac{E_2}{E_1}\right)\frac{s}{l} \qquad D^*_{22} = D_{22}\left(1 + 6\left(1 - \mu_{12}^2\frac{E_2}{E_1}\right)\left(H/h\right)^2\right)$$

$$A^*_{66} = \frac{E.h}{2\left(1 + \mu_{23}\right)} = A_{66}; \qquad D^*_{66} = 2\frac{E.h^3}{24\left(1 + \mu\right)} = 2D_{66}$$

$$A^*_{12} = \mu_{12}A^*_{22}; \qquad D^*_{12} = \bar{\mu}_{12}.D^*_{22}$$

According to [5], the static equations of a plate are the form:

$$\frac{\partial N_x}{\partial x} + \frac{\partial N_{xy}}{\partial y} = 0$$

$$\frac{\partial N_{xy}}{\partial x} + \frac{\partial N_y}{\partial y} = 0 \qquad (3)$$

$$\frac{\partial^2 M_x}{\partial x^2} + 2\frac{\partial^2 M_{xy}}{\partial x \partial y} + \frac{\partial^2 M_y}{\partial y^2} = p$$

Where: $J_i = \sum_{k=1}^{n}\int_{h_{k-1}}^{h_k}\rho^{(k)}z^{(i)}dz, i = 0,1,2$,

Substituting (1), 2 into (3) we get a set of static equations of a corrugated plate in terms of displacements.

$$\begin{aligned}
&A_{11}^{*}\frac{\partial^2 u}{\partial x^2}+A_{66}^{*}\frac{\partial^2 u}{\partial y^2}+\left(A_{12}^{*}+A_{66}^{*}\right)\frac{\partial^2 v}{\partial x\partial y}+A_{11}^{*}\frac{H\pi^2}{l^2}\mathbf{sin}\frac{\pi x}{l}.\frac{\partial w}{\partial x}+A_{11}^{*}\frac{H\pi^3}{l^3}\mathbf{cos}\frac{\pi x}{l}.w=0\\
&A_{22}^{*}\frac{\partial^2 v}{\partial y^2}+A_{66}^{*}\frac{\partial^2 v}{\partial x^2}+\left(A_{12}^{*}+A_{66}^{*}\right)\frac{\partial^2 u}{\partial x\partial y}+A_{12}^{*}\frac{H\pi^2}{l^2}\mathbf{sin}\frac{\pi x}{l}.\frac{\partial w}{\partial y}=0\\
&D_{11}^{*}\frac{\partial^4 w}{\partial x^4}+2\left(D_{12}^{*}+2D_{66}^{*}\right)\frac{\partial^4 w}{\partial x^2\partial y^2}+2D_{22}^{*}\frac{\partial^4 w}{\partial y^4}=p
\end{aligned}\tag{4}$$

These equations are used to study static and dynamic states of corrugated plates in the form of sine wave.

BENDING PROBLEM

Boundary condition

Consider a simply supported rectangular corrugated plate in the form of sine wave, the boundary condition are:

w = 0, v = 0, M_x = 0, $u \neq 0$ at x = 0, x = a

w = 0, u = 0, M_y = 0, $v \neq 0$ at y = 0, y = b

Bending problem

The displacement field satisfying boundary conditions can be chosen as follows :

$$\left.\begin{aligned}
u&=\sum_{m=1}^{\infty}\sum_{n=1}^{\infty}U_{mn}\cos\frac{m\pi x}{a}\sin\frac{n\pi y}{b}\\
v&=\sum_{m=1}^{\infty}\sum_{n=1}^{\infty}V_{mn}\sin\frac{m\pi x}{a}\cos\frac{n\pi y}{b}\\
w&=\sum_{m=1}^{\infty}\sum_{n=1}^{\infty}W_{mn}\sin\frac{m\pi x}{a}\sin\frac{n\pi y}{b}
\end{aligned}\right\}\tag{5}$$

Where m, n are natural numbers representing the number of half waves in the x and y directions, respectively.

Applying the Galerkin – Bubnov procedure, we obtain a set of algebraic equations in matrix form as follows:

$$\begin{bmatrix} n_{11} & n_{12} & n_{13}\\ n_{21} & n_{22} & n_{23}\\ n_{31} & n_{32} & n_{33}\end{bmatrix}\begin{Bmatrix} U_{mn}\\ V_{mn}\\ W_{mn}\end{Bmatrix}=\begin{Bmatrix} 0\\ 0\\ \dfrac{4ab}{mn\pi^2}p\end{Bmatrix}\tag{6}$$

Where:

$$n_{11}=\frac{1}{4}\left(A_{11}^{*}\frac{m^2\pi^2 b}{a}+A_{66}^{*}\frac{n^2\pi^2 a}{b}\right);\qquad n_{12}=n_{21}=\frac{1}{4}\left(A_{12}^{*}+A_{66}^{*}\right)mn\pi^2$$

$$n_{13}=-\frac{m^3 lbH\pi^2 A_{11}^{*}\left(\cos\frac{\pi a}{l}-1\right)}{(a+2ml)(a-2ml)a};\qquad n_{22}=\frac{1}{4}\left(A_{22}^{*}\frac{n^2\pi^2 a}{b}+A_{66}^{*}\frac{m^2\pi^2 b}{a}\right)$$

$$n_{23}=-\frac{m^2 nH\pi^2 lA_{12}^{*}\left(\cos\frac{\pi a}{l}-1\right)}{(a+2ml)(a-2ml)};\qquad n_{33}=\frac{1}{4}\left[\begin{array}{l}D_{11}^{*}\frac{m^4\pi^2 b}{a^3}+2\left(D_{12}^{*}+2D_{66}^{*}\right)\\ \times\frac{m^2 n^2\pi^4}{ab}\end{array}\right]+D_{22}^{*}\frac{n^4 a\pi^4}{4b^3}$$

RESULTS AND DISCUSSION

A simply supported sinusoidally corrugated plate (Fig. 2) that is subjected to a uniformly distributed load of 100 Pa is considered. The dimensions of the plate are:

H = 10mm, ℓ = 100 mm, thickness h = 18 mm, E = 30 GPa, μ=0.3, ρ=7380 kg/m^3, contribution load p = 100Pa, a = b = 1800mm and 9 corrugations.

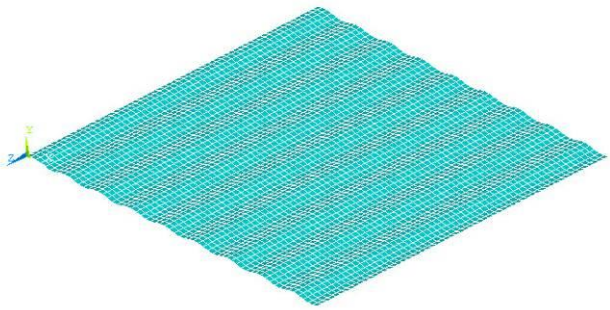

Fig. 2. *Model of metal corrugated sheet*

The results of deflections of corrugated plates calculated by analytic method are compared with the ANSYS results. The deflections along the center line of x axis (y=0.9m) and of y axis (x=0.9m) of the plate are calculated and compared with the ANSYS results, as is shown in table 1 and 2.

Table 1. *Deflections along the center line (y=0.9m) of a simply supported sinusoidal corrugated plate*.

Calculated points	ANSYS (mm)	Present results (mm)	Error relative to ANSYS results (%)
(0.9, 0.2)	0.069	0.068	1.45
(0.9, 0.4)	0.128	0.127	0.78
(0.9, 0.9)	0.191	0.190	0.52

Table 2. *Deflections along the center line (x=0.9m) of a simply supported sinusoidal corrugated plate.*

Calculated points	ANSYS (mm)	Present results (mm)	Error relative to ANSYS results (%)
(0.2, 0.9)	0.072	0.073	1.39
(0.4, 0.9)	0.131	0.133	1.53
(0.9, 0.9)	0.192	0.193	0.52

CONCLUSION DEFLECTION

According to Briassouli's technique [3], the paper presents analytic method to calculate the deflections of the plate. Equivalent expressions of stiffness are applied to analysis bending of corrugated metal plates. The results obtained by analytic method and the ANSYS results are identical and the errors are small, this confirms the believe of equivalent flat plates.

This approach can be used to analysis of stability problems, impact for sinusoidally corrugated plate and trapezoidally corrugated plate.

REFERENCE

1. Khuc Van Phu, Le Van Dan. (2007), *Vibration of corrugated cross-ply laminated composite plates*, Journal of science 23, pp 105-112.
2. Dao Huy Bich, Khuc Van Phu. (2006), *Non-linear analysis on stability of corrugated cross-ply laminated composite plates*. Vietnam J. of Mech.VAST, vol.28, $N^0$4, , pp.197-206.
3. Seydel E. (1931), *Schubknickversuche mit Welblechtafeln*, DVL – Bericht.
4. Demetres Briassoulis. (1986), *Equivalent orthotropic properties of corrugated sheets*. Computer & Structures, Vol. 23. No. 2.pp. 129-138.
5. Reddy J.N. (2004), *Mechanics of Laminate composite plates and shells: Theory and Analysis*. CRC Press.
6. Tran Ich Thinh, Nguyen Dinh Ngoc, Analysis of vibration of corrugated composite plate. National conference of solid mechanics, 2010.

TÓM TẮT

PHÂN TÍCH UỐN TẤM KIM LOẠI LƯỢN SÓNG

Nguyễn Đình Ngọc*, Nguyễn Thị Huệ
Trường Đại học Kỹ thuật Công nghiệp – ĐH Thái Nguyên

Báo cáo trình bày một số kết quả tính uốn theo phương pháp giải tích của tấm kim loại lượn sóng hình sin chịu điều kiện biên bản lề 4 cạnh. Tấm lượn sóng hình sin được quy đổi về tấm phẳng tương đương thông qua quy đổi độ cứng màng và độ cứng uốn. Kết quả số của độ võng tính trên tấm phẳng tương đương được so sánh và đánh giá với kết quả tính theo ANSYS.

Từ khóa: *Tấm lượn sóng, độ võng, tấm trực hướng, ANSYS, PTHH*

Ngày nhận bài:20/6/2015; Ngày phản biện:06/7/2015; Ngày duyệt đăng: 30/7/2015
Phản biện khoa học: *PGS.TS Ngô Như Khoa - Trường Đại học Kỹ thuật Công nghiệp - ĐHTN*

* *Tel: 0984 076555, Email: ngocnd@tnut.edu.vn*